TOPUNOV, A.M.

Some problems of the energy relationship of the flow of a working substance with the long blading of an axial flow turbine. (MIRA 15:5)
Trudy LKI no.28:161-172 '59.

1. Kafedra sudovykh, parovykh i gazovykh turbin Leningradskogo korablestroitel'nogo instituta.
(Turbines--Fluid dynamics)

L 18530-63 EWT(d)/EWT(m)/BDS/EWP(r) AFFTC/APGC

ACCESSION NR: AR3004549 S/0285/63/000/006/0006/0006

SOURCE: RZh. Turbostroyeniye. Otd. vy*pusk, Abs. 6.49.34

54

AUTHOR: Topunov, A. M.

26

TITLE: Heat balance of turbine segments with relatively long blades. Textbook

CITED SOURCE: Leningr. korablestroit. in-t. L., 1962, 109 str.

TOPIC TAGS: turbine segment , heat balance, vane

TRANSLATION: [Abstracter's note: this is a bibliographic entry. Original text is 109 pages long and is illustrated.]

DATE ACQ: 01Jul63 SUB CODE: MD ENCL: 00

Card 1/1

TOPUNOV, A.M.

Considering the effect of radial components of speed in calculating an axial turbine stage. Trudy LKI no.35:127-136 '62. (MIRA 16:7)

1. Kafedra sudovykh parovykh i gazovykh turbin Leningradskogo korablestroitel'nogo instituta.
(Marine turbine—Aerodynamics)

TOPUNOV, A.M.

Theory of a cylindrical flow in a turbine stage. Trudy LKI no.38:221-227 '62. (MIRA 16:7)

1. Kafedra sudovykh parovykh i gazovykh turbin Leningradskogo korablestroitel'nogo instituta.
(Marine turbines) (Fluid mechanics)

MOISEYEV, A.A.; TOPUNOV, A.M.; MYACHIN, Ye.V.

Use of steam-gas power plants on ships. Trudy LKI no.38:187-195 '62. (MIRA 16:7)

1. Kafedra sudovykh parovykh i gazovykh turbin Leningradskogo korablestroitel'nogo instituta.
(Marine engineering)

L 17303-63 EWT(1)/BDS/EPR AFFTC/ASD/APGC Ps-4 WW

ACCESSION NR: AP3002763 S/0143/63/000/005/0055/0062 69 57

AUTHOR: Topunov, A. M. (Candidate of technical sciences); Danilovskiy, A. G. (Engineer)

TITLE: Operation of a turbine stage with relatively long blades under off-rating conditions

SOURCE: IVUZ. Energetika, no. 5, 1963, 55-62

TOPIC TAGS: gas turbine, long turbine blade, off-rating condition

ABSTRACT: A theoretical study is offered of an intermediate turbine with long blading under off-rating conditions when the total radial parameters before the nozzle are variable. With a number of important assumptions concerning the turbine path, axial symmetry of flow, iso-entropy-type of process, similar variation of parameters before and after the stage, etc., fundamental equations are set up and solved. In solving radial-equilibrium equations, special attention is paid

Card 1/2

L 17303-63

ACCESSION NR: AP3002763

to variation of parameters before the nozzle and behind the blading. General solutions are illustrated by a numerical example which gives hub-to-tip gas velocities and pressure, as well as axial velocity and radial acceleration. Orig. art. has: 4 figures and 22 formulas.

ASSOCIATION: Leningradskiy Korablestroitel'ny*y institut (Leningrad Shipbuilding Institute)

SUBMITTED: 12Oct62 DATE ACQ: 24Jul63 ENCL: 00

SUB CODE: EE NO REF SOV: 009 OTHER: 000

Card 2/2

TOPUNOV, A.M.; TIKHOMIROV, B.A.

Selecting optimum parameters for a two-cascade gas-turbine engine. Izv. vys. ucheb. zav.; av. tekh. 7 no.3:108-118 '65. (MIRA 18:9)

L 46175-66 EWT(m)/EWP(w)/EWP(f)/EWP(v)/T-2/EWP(k) IJP(c) WW/EM

ACC NR: AP6021934 (N) SOURCE CODE: UR/0143/66/000/003/0062/0068

AUTHOR: Moiseyev, A. A. (Doctor of technical sciences, Professor); Topunov, A. M. (Candidate of technical sciences); Shnitser, G. Ya. (Engineer); Myachin, Ye. V. (Engineer); Kulesh, Yu. N. (Engineer)

ORG: Leningrad Shipbuilding Institute (Leningradskiy korablestroitel'nyy institut)

TITLE: Effect of the form of the bounding surfaces of the flow through section on the working process of a turbine stage

SOURCE: IVUZ. Energetika, no. 3, 1966, 62-68

TOPIC TAGS: hydrodynamic theory, turbine stage, turbine design

ABSTRACT: One of the main factors determining the end losses in a turbine is the amount of overlap between stages. The present article gives the results of an investigation of the effect of the overlap at the point of the blades on the overall characteristics and on the structure of the three dimensional flow in the stages of a marine turbine. Experiments were carried out with various geometries of the system; the results are shown in tabular and graphic form. In general, the following conclusions were drawn: 1) the positive overlap before

Card 1/2 UDC: 621.165

L 46175-66

ACC NR: AP6021934

the turbine jet unit and the gap between the overlap and the entry edges of the blades have a rather strong effect on the efficiency and other overall characteristics of the turbine stages. It is shown that losses due to overlap can exceed losses due to sudden expansion of the flow; 2) the fact that the observed effect of positive overlap was greater than in previous investigations is attributed to the presence of a conical outer bounding surface and to the absence of twist in the working blades; 3) the effect of the overlap and of the gap increases with an increase in the relative length of the blades; 4) the discharge coefficient decreases with an increase in the overlap and a decrease in the gap; this is explained by an increase of the losses in the jet nozzle unit; 5) a change in the axial gap has practically no effect on the nature of the effect of the overlap. Orig. art. has: 5 figures and 1 table.

SUB CODE: 13,20 / SUBM DATE: 01Jul65/ ORIG REF: 003

Card 2/2 mt

TOPUNOV, F.G., arkhitektor

Multistory parking places for automobiles. Gor.khoz.Mosk. 36 no.1:30-32 Ja '62. (MIRA 16:1)

(Moscow--Automobile parking)

TOFUNOV, L.

20520 TOFUNOV, L. A. D. Zasyadko - konstruktor boyevykh raket. Ill. S. Pivovarov. Teknika - molodezh., 1949, No. 6, s. 18-19, s. portr.-Bibliogr: 5 NAZV.

SO: LETOPIS ZHURNAL STATEY - Vol. 28, Moskva - 1949.

RAKOVSKIY, V.Ye.; ORSHANSKIY, R.B.; PARNOV, Ye.I.; VOLGINA, I.V.; ZHIRNOVA, V.M.; TOPUNOVA, A.I.; BASHARIN, I.Ye.

Thermal decomposition of certain hydrocarbons in the presence of iron oxide. Trudy Kal. torf. inst. no.13:140-143 '63.

Effect of the speed of heating and the size of particles on the thermal decomposition of milled peat. Ibid.:144-147 (MIRA 17:12)

9

CA

Sulfide-magnetite ores as a basis of the cobalt industry of Russia. G. A. Topunova. *Tsvetnye Metal.* 1940, No. 5-6, 35-6.—Exploratory work in 1938-39 showed that certain Ural deposits of magnetite with embedded sulfides are a potential source of Co, which exists in the sulfides as an isomorphous admixt. The magnetite ores are used for the blast furnaces of the Tagil Steel Works, and are previously purified from S by magnetic sepn. T. suggests that methods be worked out for enrichment of sulfide tailings to produce Co concentrates.

B. N. Daniloff

PLISKO, Ye.A.; TOPUNOVA, I.G.; DANILOV, S.N.

Preparation of cellulose ethers containing substituents having branched carbon chain. Zhur.prikl.khim. 36 no.6:1303-1037 Je '63. (MIRA 16:8)

1. Institut vysokomolekulyarnykh soyedineniy AN SSSR.
(Cellulose ethers)

L 17901-63 EWP(j)/EWT(m)/BDS ASD Pc-4 RM

ACCESSION NR: AP3003772 S/0080/63/036/006/1303/1307

59

AUTHORS: Plisko, Ye. A.; Topuncva, I. G.; Danilov, S. N.

TITLE: Obtaining simple esters of cellulose containing substitutes with a branched carbon chain

SOURCE: Zhurnal prikladnoy khimii, v. 36, no. 6, 1963, 1303-1307

TOPIC TAGS: ester, cellulose, carbon chain, isopropane, isobutane, tributane

ABSTRACT: It has been shown that previously-described unknown isopropane isobutane and tributane esters of the benzolsulphuric acids are alkalazing media. The films from tributane isopropane esters of cellusose possess high mechanical properties. Orig. art. has: 6 tables.

ASSOCIATION: Institut vy*sokomolekulyarny*kh soyedineniy AN SSSR (Institute of High-Molecular Compounds, AN SSSR)

SUBMITTED: 05Apr62 DATE ACQ: 07Aug63 ENCL: 00

SUB CODE: CH NO REF SOV: 004 OTHER: 001

Card 1/1

APPROVED FOR RELEASE: 08/31/2001 CIA-RDP86-00513R001756320004-3"

APPROVED FOR RELEASE: 08/31/2001 CIA-RDP86-00513R001756320004-3"

TOPURIDZE, A. I., CAND MED SCI, "ON THE PROBLEM OF THE state of INNERVATION ~~CONDITION~~ OF CANCER OF THE LARYNX AND ITS SURROUNDING TISSUES." TBILISI, PUBLISHING HOUSE OF ACAD SCI GSSR, 1960. (TBILISI STATE MED INST). (KL, 3-61, 236).

TOPURIDZE, K

TOPURIDZE, K

Kazan'. Moskva, Izd-vo Akademi i Arkhitektury SSSR, 1945.

91 p. chiefly illus. (Sokrovishcha russkogo zodchestva)

At head of title: Akademiya Arkhitektury SSSR. Institut Istorii i Teorii Arkhitektury.

MOSIASHVILI, G.I.; TOPURIDZE, K.V.; KIRIAKOVA, N.G.

Azotobacterin efficiency in vineyard soils. Mikrobiologiia 32 no.5:835-837 S-O'63 (MIRA 17:2)

1. Institut sadovodstva, vinogradarstva i vinodeliya GruzSSR, Tbilisi.

BEKAURI, N.G.; TOPURIDZE, L.F.

Possibility of replacing platinum by some metallic oxide catalysts. Trudy Inst.khim.AN Gruz.SSR 16:51-56 '62. (MIRA 16:4)
(Catalysts) (Metallic oxides)

TOPURIDZE, N. N.

TOPURIDZE, N. N. -- "The Transformation of Irrational Expressions into Irrational Relations in the Intermediate School." Sci Res Inst of Pedagogical Sciences, Min Education Georgian SSR. Tbilisi, 1955. (Dissertation for the Degree of Candidate of Pedagogical Sciences.)

SO: Knizhnaya letopis', No. 4, Moscow, 1956

TOPURIDZE, V.D.

Designing cylindrical slopping shells for mushroom-shaped roofs. Trudy nauch. korr. Inst. stroi. dela AN Gruz. SSR. no.2:125-137 '58. (MIRA 12:7)

(Roofs, Shell)

TOPURIDZE, V.D.

Problem of developing structural designs for multistory reinforced concrete buildings [in Georgian with summary in Russian]. Trudy Inst. stroi. dela AN Gruz. SSR 4:165-171 '53. (MLRA 9:10)

(Reinforced concrete construction) (Elastic plates and shells)

TOPURIDZE, YE. M.

TOPURIDZE, YE. M. --"Biological Basis of the Selections of Tangerines."
*(Dissertations For Degrees In Science and Engineering
Defended at USSR Higher Educational Institutions)(29)
Min Higher Education USSR, Georgian Order of Labor
Red Banner Agricultural Inst, Tbilisi, 1955

SO: Knizhnaya Letopis' No 29, 16 July 1955

* For the Degree of Doctor of Agricultural Sciences

TOPURIDZE, YE. P.

TOPURIDZE, Ye.P.; MTVARADZE, V.D.

Studying the amebic abscess of the lungs. Soob. AN Gruz. SSR 18 no.5: 619-622 My '57. (MLRA 10:9)

1 Respublikanskaya tsentral'naya klinicheskaya bol'nitsa, Tbilisi. Predstavleno akademikom M.D. TSinamdzgvrishvili [deceased].
(LUNGS--ABSCESS) (AMEBIASIS)

USSR/ Miscellaneous - Radio-operator contests

Card 1/1 Pub. 89 - 5/28

Authors : Topuria, A., Supreme Contest Judge, Laureate of Stalin Premium

Title : Competitions among friends

Periodical : Radio 1, page 9, Jan 1954

Abstract : Competitions in receiving radio-telegrams (radio-grams) by ear are described. The competitions took place in Moscow (USSR). The Russian and the Bulgarian radio amateurs were the participants.

Institute: .....

Submitted: .....

KURNOSOVA, N.A.; BONDARENKO, V.A.; RAKHMAN, E.Z.; YAVRUMOV, V.A.; KIRYUSHINA, L.A.; MANOLOVA, E.P.; ESSEL', A.Ye.; TARASOVA, M.A.; PIROGOVA, A.I.; PIROGOV, I.Ya.; AKOPYAN, R.A.; BABUNASHVILI, N.P.; PROTSENKO, O.A.; PUNSKAYA, I.G.; BURMISTROVA, O.G.; POGOREL'SKAYA, S.A.; D'YACHENKO, T.F.; TOPURIYA, I.I.; MATABELI, G.V.; GIGITASHVILI, M.S.; VACHNADZE, T.G.; MAZURIN, N.D.; NABIYEV, E.G.; BLOKHOV, V.P.

Abstracts. Zhur. mikrobiol., epid. i immun. 41 no.4:142-147 Ap '64. (MIRA 18:4)

1. Moskovskiy institut epidemiologii i mikrobiologii (for Kurnosova). 2. Faleshtskaya rayonnaya bol'nitsa Moldavskoy SSR i Vinnitskiy meditsinskiy institut imeni Pirogova (for Bondarenko). 3. Stavropol'skiy institut vaktsin i syvorotok (for Rakhman). 4. Kaluzhskiy oblastnoy otdel zdravookhraneniya (for Yavrumov, Kiryushina). 5. Donetskiy meditsinskiy institut (for Manolova). 6. Tbilisskaya rayonnaya imeni 26 komissaro sanitarno-epidemiologicheskaya stantsiya (for Akopyan, Babunashvili). 7. Kemerovskiy meditsinskiy institut (for Protsenko). 8. Turkmenskiy meditsinskiy institut (for Punskaya, Burmistrova). 9. Gor'kovskiy institut epidemiologii i mikrobiologii i Gor'kovskaya rayonnaya sanitarno-epidemiologicheskaya stantsiya (for Pogorel'skaya, D'hachenko). 10. Institut meditsinskoy parazitologii i tropicheskoy meditsiny imeni Virsaladze Ministerstva zdravookhraneniya Gruzinskoy SSR (for Topuriya, Matabeli, Gigitashvili, Vachnadze). 11. Kazanskiy institut usovershenstvovaniya vrachey (for Nabiyev).

TOPURIYA, I. I.

TOPURIYA, I. I.: "Ancylostomiatic anemia and its treatment." Georgian State Publishing House for Medical Literature. Tbilisi State Medical Inst. Tbilisi, 1956.
(Dissertation for Degree of Candidate in Medical Sciences).

SO: Knizhnaya letopis', No 23, 1956.

TOPURIYA, I.I.; MATIKASHVILI, T.Sh.

Ways of eliminating Taeniarhyncius infestation in Georgia. Med. paraz.i paraz. bol. no.3:276-277 '61. (MIRA 14:9)

1. Iz Nauchno-issledovatel'skogo instituta meditsinskoy parazitologii i tropicheskoy meditsiny imeni S.S. Virsaladze Ministerstva zdravookhraneniya Gruzinskoy SSR (dir. instituta I.I. Topuriya).
(GEORGIA--TAENIA)

TOPURIYA, M.D. (Moskva); KASHIN, V.I. (Moskva); SAMARIN, A.M. (Moskva)

Production methods and the properties of iron-aluminum alloys.
Izv. AN SSSR. Met. no.5:121-123 S-O '65. (MIRA 18:10)

A-2

BC

Syenite rocks of the Sapar river (West Georgia). G. G. Kazakashvili and P. A. Topuria (Compt. rend. Acad. Sci. U.R.S.S., 1939, 23, 553—556).—Two syenite microstocks forming dykes in Middle Eocene beds of andesite breccia and flysch are described. One has a different composition in the upper and lower portions; the other consists of a transitional rock from typical syenites to teschenites, called by the authors analcime syenite. L. J. J.

ASM-SLA METALLURGICAL LITERATURE CLASSIFICATION

Some syenite rocks of the Supsa River (West Georgia). G. G. Kazakashvili and P. A. Topuriya. *Compt. rend. acad. sci. U. R. S. S.* 23, 553-6(1939)(in English).—Analyses and mineralogical features of 5 syenites obtained from 2 quite different dikes are given. The first is composed of syenite and syenite-diorite, hypidiomorphic, at the foot and syenite-aplite, porphyritic, at the roof; its thickness is 500-600 m. The rock of the second dike is analcime syenite and is intermediate between the analcime basic rocks and the normal syenites.

D. W. Pearce

ASM-SLA METALLURGICAL LITERATURE CLASSIFICATION

L 11203-66 EWT(m)/EWP(w)/T/EWP(t)/EWP(b) JD

ACC NR: AP5026359 SOURCE CODE: UR/0370/65/000/005/0121/0123

AUTHOR: Topuriya, M. D. (Moscow); Kashin, V. I. (Moscow); Samarin, A. M. (Moscow)

ORG: none

TITLE: Properties of iron-aluminum alloys and smelting methods

58
B

SOURCE: AN SSSR. Izvestiya. Metally, no. 5, 1965, 121-123

TOPIC TAGS: iron aluminum alloy, aluminum containing alloy, induction furnace, smelting furnace, vacuum furnace, iron containing alloy, MAGNETIC PROPERTY, OXYGEN, ALLOY COMPOSITION

ABSTRACT: The effect of the smelting method on the composition of iron-aluminum alloys was investigated. Fe-Al alloys containing 14-17% Al and small concentrations of C, S, O_2, N_2, Si, Mn, and P were smelted in open induction, vacuum induction, and induction furnaces in hydrogen, helium, and argon atmospheres. The conditions of smelting operation in terms of temperature, duration and cooling rate varied widely. Smelting in the open induction furnace yielded alloys with a 0.002-0.009% oxygen content. Substantially smaller oxygen content (10-40%) was found in alloys smelted in the vacuum induction furnace. Induction furnace smelting in helium, argon, and hydrogen atmospheres produced the highest alloy purity (alloys with the lowest content of S, N_2, and O_2). It was found that thermomechanical working exerted a profound effect on the magnetic properties of the alloys.

SUB CODE: 11/ SUBM DATE: 00/ ORIG REF: 000/ OTH REF: 000

Card 1/1 melting UDC: 669.15'71.046

898. ხიმშიაშვილი ნიკოლოზ გიორგის ძე. ზემო რაჭის ზედა ტრიასული ნალექების ფაუნა და სტრატიგრაფია. 1949. 270 გვ., ილ., [4] ს. ფ., გეოგრ. რუკა. [13 ცხრ.].

დოსკეი 1949, 4.3.

Химшиашвили Николай Георгиевич. Фауна и стратиграфия верхнеюрских осадков Верхней Рачи. 1949. 270 с., илл. [4] вкл. л., кар. [13 тбл.].

Защ. 1949, 4.3.

899. ჯანგლიძე ოლგა ისაკის ასული. სამეთაფლის მოლუსკული ფაუნა-ბინიგერები. 1948. 156, 3 გვ. [16] ს. ფ., რუკა. ცხრ., სქ. (სოხუმის პედ. ინს.).

დოსკეი 1949, 25.2.

Джанелидзе Ольга Исламовна. Миоценовые фораминиферы Грузии. 1948. 156, 3 с. [16] вкл. л., кар., тбл., сх. (Сухумский пед. инст.).

Защ. 1949, 25.2.

* * *

900. Ахмедли Муртаз Косум Оглы. К изучению вопроса наличия церезина в твердых углеводородах нефти. Баку. 1939. 104 с., илл.

Защ. 1939, 29.6.

901. Везиришвили Елена Константиновна. Минералогия ртутных месторождений Грузии. (Горная Рача, Абхазия). 1948. 100 с., фото-, тбл. (Инст. геол. и минерал. АН Груз. ССР).

Защ. 1948, 24.5.

902. Волынский Игорь Сергеевич. Определение рудных минералов в полированных шлифах по физическим свойствам. 1940. Ч. 1 Руководство. 111 с., с фиг. Ч. 2. Определитель. [86] тбл.

Защ. 1943, 4.6.

903. Гвахария Георгий Владимирович. Минералогия поствулканических процессов окрестностей г. Тбилиси. (Согавлугское месторождение). 1939 [2], 108 с., фотопл., 8 вкл. л. (Цеолиты Грузии. Монография № 2, 1952).

Защ. 1939, 17.6.

904. Казакашвили Тамара Григорьевна. Храмский кристаллический массив. Б. г. 110 с., фотопл. (Геол.-геогр. очерк).

Защ. 1939, 17.6.

905. Кебуладзе Варлам Васильевич. Применение метода сопротивлений к разведке баритовых жильных месторождений. 1938. 120 с.

Защ. 1938, 17.4

906. Киласония Пиера Федорович. Петрографическое строение Юго-Восточной части двирульского кристаллического массива. (Бассейн р. Черат Хеви). 1940. 123 с., илл., карт. тбл. (Тр. Инст. геол., т. 2, 1950. геол. петр. серия).

Защ. 1940, 3.12.

907. Кузнецова Елизавета Владимировна. Основные процессы минерогенеза, связанные с древней гранитной интрузией Балкарии. 1942. 145 с. [6] вкл. л., илл. (Акад. наук СССР, Канд. диссерт. Инст. геол. наук).

Защ. 1942, 25.7.

908. Татишвили Нина Фоминична. К петрографии южного склона главного Кавказского хребта в пределах Верхней Рачи. 1939. 89 с. (Тр. груз. гос. геол. управл. в. 5).

Защ. 1939, 17.6.

909. Топурия Павел Александрович. К петрографии Рачинского интрузива порфировидного гранита на двирульского массива. 1938. 478 с. (Бюлл. геол. инст., т. 3, 1938).

Защ. 1938, 15.4.

910. Узнадзе Медея Дмитриевна. Третичная флора Западного Казахстана и ее отношение к палеогеновой европейской флоре. 1941. 259, [4] с., [14] вкл. л., тбл. (Тр. Инст. геол. 1941, т. 4 (9) 1,2).

Защ. 1941, 30.6.

Dissertation for degree of

Candidate Geological Sciences

Def. at
Tbilisi State U.

TOPURIYA, S.B.

One generalization of Knopp's theorem. Soob. AN Gruz. SSR 19 no.4: 385-392 O '57. (MIRA 11:5)

1. Sukhumskiy pedagogicheskiy institut im. A.M. Gor'kogo. Predstavleno chlenom-korrespondentom AN GruzSSR G.S. Chogoshvili. (Series)

TOPURIYA, S.B.

Some theorems of the Tauber type for double series. Soob. AN Gruz. SSR 20 no. 2:129-136 F '58. (MIRA 11:7)

1. Sukhumskiy gosudarstvennyy pedagogicheskiy institut im. A.M. Gor'kogo. Predstavleno chlenom-korrespondentom AN GruzSSR G.S. Chogoshvili.

(Series)

TOPURIYA, S. B.: Master Phys-Math Sci (diss) -- "On certain theorems of the Tauber type for double series and double integrals". Tbilisi, 1959, published by the Acad Sci Georgian SSR. 16 pp (Acad Sci Georgian SSR, Tbilisi Math Inst im A. M. Razmadze and Computer Center), 150 copies (KL, No 13, 1959, 100)

TOPURIYA, S.B.

Summing of Fourier - Lebesgue series by L(r) and Voronoi's methods. Dokl. AN Gruz. SSR 30 no.3:513-519 D '63. (MIRA 17:11)

FUTURYA, G.B.

Double Fourier gap series. Ta b. AN Ukr. SSR 31 [illegible] 1964.
(MIRA 17:7)

1. Sukhumskiy gosudarstvennyy pedagogicheskiy institut inostrannykh yazykov. Gor'kogo. Predstavlena akademikom N.P. Vekua.

TOPURIYA, S.B.

Summation of double Fourier-Lebesgue series. Soob. AN Gruz. SSR 38 no.1:7-13 Ap '65. (MIRA 18:12)

1. Sukhumskiy gosudarstvennyy pedagogicheskiy institut imeni Gor'kogo. Submitted June 17, 1964.

TOPURIYA, S.B.

Linear methods for summing Fourier-Laplace series. Soob. AN Gruz. SSR 40 no.1:11-18 O '65. (MIRA 18:12)

1. Sukhumskiy gosudarstvennyy pedagogicheskiy institut imeni A.M. Gor'kogo. Submitted February 24, 1965.

L 24076-66 EWT(d) IJP(c)

ACC NR: AP6014981 SOURCE CODE: UR/0251/65/037/003/0513/0520

AUTHOR: Topuriya, S. B.

ORG: Sukhumi State Pedagogical Institute im A. M. Gor'kiy (Sukhimskiy gosudarstvennyy pedagogicheskiy institut)

TITLE: Singular double integrals extended to an infinite two-dimensional region

SOURCE: AN GruzSSR. Soobshcheniya, v. 37, no. 3, 1965, 513-520

TOPIC TAGS: double integral, singular integral, Cauchy problem

ABSTRACT: The article considers the question of expressing the function $f(x,y) \in L(-\infty, \infty; -\infty, \infty)$ as the limit of a singular double integral extended to an infinite two-dimensional region. The function $\Phi_{\gamma,\delta}(t-x, \tau-y)$ $(\gamma>0, \delta>0)$, summable on $R = (-\infty < t < \infty; -\infty < \tau < \infty)$ for any x and y, $-\infty < x < \infty$; $-\infty < y < \infty$, is said to be the kernel if

$$\lim_{(\gamma,\delta)\lambda \to 0} \int_a^b \int_c^d \Phi_{\gamma,\delta}(t-x, \tau-y)\, dt\, d\tau = 1$$

for any a, b, c, and d, where $a < x < b$; $c < y < d$. The expression $(\gamma, \delta), \to 0$ denotes the approach of γ and δ to zero for $\frac{\gamma}{\delta} \leq \frac{\gamma}{\delta} \leq \lambda$, where λ is a given number ≥ 1. An integral of the form

Card 1/3

L 24076-66

ACC NR: AP6014981

$$U(; x, y, \gamma, \delta) = \int_{-\infty}^{\infty}\int_{-\infty}^{\infty} \Phi_{\gamma,\delta}(t-x, \tau-y) f(t, \tau)\, dt\, d\tau,$$

where $\Phi_{\gamma,\delta}(t-x, \tau-y)$ is the kernel, is said to be a singular integral. The author outlines the proof of the following theorem: If the kernel $\Phi_{\gamma,\delta}(t-x, \tau-y)$ possesses the property

$$\Phi_{\gamma,\delta}(t-x, \tau-y) = \begin{cases} O\left(\frac{1}{\gamma\delta}\right), & |t-x|<\gamma, \ |\tau-y|<\delta, \\ O\left[\frac{\gamma\delta}{(t-x)^2(\tau-y)^2}\right], & |t-x|>\gamma, \ |\tau-y|>\delta, \\ O\left[\frac{\gamma}{(t-x)^2\delta}\right], & |t-x|>\gamma, \ |\tau-y|<\delta \ \ \frac{1}{\lambda}<\frac{\gamma}{\delta}<\lambda, \\ O\left[\frac{\delta}{\gamma(\tau-y)^2}\right], & |t-x|<\gamma, \ |\tau-y|>\delta, \ \ \frac{1}{\lambda}<\frac{\gamma}{\delta}<\lambda, \end{cases}$$

then for any summable function $f(t, \tau)$ the equality

$$\lim_{(\gamma,\delta)\lambda \to 0} \int_{-\infty}^{\infty}\int_{-\infty}^{\infty} \Phi_{\gamma,\delta}(t-x, \tau-y) f(t, \tau)\, dt\, d\tau = f(x, y)$$

Card 2/3

L 24076-66

ACC NR: AP6014981

holds for almost all $(x, y) \in R$. The proof is based on four lemmas. The following examples are given: 1) a Fourier integral $C\lambda$-summable at the point (x, y) to the value S; 2) a Fourier-Lebesgue integral summable at the point (x, y) to the value S by Cauchy's method; 3) a Fourier-Lebesgue integral summable at the point (x, y) to the value S by Weierstrass' method.

The following corollary is given: Let

$$f^*(x, y) = \begin{cases} f(x, y), & \text{if } (x, y) \in R_0 = [a, b; c, d], \\ 0, & \text{if } (x, y) \in CR_0; \end{cases}$$

then almost everywhere in R_0 the relation

$$\lim_{(\gamma, \delta)\lambda \to 0} \int_a^b \int_c^d \Phi_{\gamma,\delta}(t - x, \tau - y) f^*(t, \tau)\, dt\, d\tau = f^*(x, y) \quad \text{holds.}$$

This paper was presented by Academician N. P. Vekua on 17 April 1964. Orig. art. has: 6 formulas. [JPRS]

SUB CODE: 12 / SUBM DATE: 17Apr64 / ORIG REF: 001 / OTH REF: 001

Card 3/3

TOPURIYA, S.B.

Singular double integrals extended over an infinite two-dimensional region. Soob. AN Gruz. SSR 37 no.3:513-520 Mr '65. (MIRA 18:5)

1. Sukhumskiy gosudarstvennyy pedagogicheskiy institut imeni Gor'kogo. Submitted 17th April 1964.

TOPURIYA, SH. R. and AKHALADZE, G. L.

Topuriya, Sh. R. and Akhaladze, G. L.: "On the clinicalmorphological characteristics and the treatment of endemic goitre in Georgia," (Report) Trudy III Zakavkazsk. s"yezda khirurgov, Yerevan, 1949), p. 252-260

SO: U-5240, 17 Dec. 53, (Letopis 'zhurnal 'nykh Statey, No. 25, 1949).

ZHGENTI, B.K.; KVALIASHVILI, A.A.; SEMENSKAYA, Ye.M.; TOPURIYA, Sh.R.; TSVERAVA, Ye.N.

Clinical aspects and therapy of radiation illness. Soob.AN Gruz. SSR 16 no.7:565-570 '55. (MLRA 9:2)

1.Deystvitel'nyy chlen AN Gruzinskoy SSR (for Zhgenti).2.Akademiya nauk Gruzinskoy SSR, Institut eksperimental'noy i klinicheskoy khirurgii i gematologii, Nauchno-issledovatel'skiy institut perelivaniya krovi GSSR i Tbilisskiy gosudarstvennyy meditsinskiy institut.

(Radiation--Toxicology)

TOPURIYA, SH. R.

SEMENSKAYA, Ye.M.; TOPURIYA, Sh.R.

[Nerve control of blood formation] Nervnaia reguliatsiia krovetvoreniia. Tbilisi, Gruzmediz. 1955. 114 p. (MIRA 10:11)
(BLOOD)

ERISTAVI, K.D., akademik; TOPURIYA, Sh.R.; ODISHVILI, G.Ya.; IOSELIANI, G.D.; PKHAKADZE, G.A.

Treating ondarteritis obliterans by hybernation and artificial hypothermia. Soob.AN Gruz.SSR 23 no.3:333-338 S '59. (MIRA 13:3)

1. AN GruzSSR, Institut eksperimental'noy i klinicheskoy khirurgii i gematologii, Tbilisi. 2. AN GruzSSR (for Eristavi).
(ARTERIES--DISEASES) (HYPOTHERMIA) (HIBERNATION, ARTIFICIAL)

TOPURIA, Z. M.

TSITSISHVILI, G.V.; TOPURIA, Z.M.

Studying the kinetics of sorption and desorption of water, methyl and ethyl alcohol vapors by askanite, silica and alumina gels [in Georgian with summary in Russian]. Trudy Inst. khim.AN Gruz.SSR 12:3-21 '56. (MLRA 10:5)
(Vapors) (Desorption) (Sorption)

PURTSELADZE, Kh.G.; CHACHANIDZE, G.D.; TOPURIYA, Z.M.; Prinimali uchastiye: SHOSHIASHVILI, E., laborant; KIREULISHVILI, M., laborant

Thermal dissociation of manganese dioxide obtained from poor carbonate ores. Trudy Inst. prikl. khim. i elektrokhim. AN Gruz. SSR 2:31-41 '61. (MIRA 16:8)

(Manganese oxide)

PURTSELADZE, Kh.G.; TOPURIYA, Z.M.

Some physicochemical properties of fertilizers produced as a result of the nitric acid treatment of manganese carbonate ores from Chiatura deposits. Trudy Inst. prikl. khim. i elektrokhim. AN Gruz. SSR 2:51-59 '61. (MIRA 16:8)

(Fertilizers and manures)
(Manganese ores)

PURTSELADZE, Kh.G.; TOPURIYA, Z.M.; CHKONIYA, T.K.; SHOSHIASHVILI, E.N.

Thermal dissociation of artificial manganese dioxide samples. Trudy Inst.prikl.khim.i elektrokhim.AN Gruz.SSR 3:163-168 '62. (MIRA 16:1)

(Manganese oxide—Thermal properties)

TOPURIYA, Z.M.

Particle size determination of artificial manganese dioxide. Trudy Inst.prikl.khim.i elektrokhim.AN Gruz.SSR 3:181-187 '62. (MIRA 16:1)

(Manganese oxide) (Sedimentation analysis)

1964

DECEASED

TOPURIA, Z. V.

1963

Radio

M-7

COUNTRY : USSR
CATEGORY :

ABS. JOUR. : RZBiol., No. 19, 1958, No. 87143

AUTHOR : Topusheva, N. A.
INST. :
TITLE : Effect of Moisture Content and Spontaneous Heating of Raw Cotton on Formation of Peel Attached to Fiber

ORIG. PUB. : Sots. s. Kh. Uzbekistana, 1957, No 9, 28-31

ABSTRACT : Peel attached to fiber (an undesirable inclusion in the yarn that lowers its quality) is the result of separation together with the fiber of portions of the outer layer of epidermis of cotton seed. Its content in the fibers depends, in particular, upon degree of maturity and storage conditions of the raw cotton. In order to determine the effect of storage conditions on quality of fiber and on the amount of peel attached to the fiber, special experiments have been conducted over a number of years at the Ferganskaya Experiment Station of Union-NIKhI. Samples of raw cotton were collected from different varieties from bolls located on different sympodia (of varying degree

CARD: 1/2

Country : USSR
CATEGORY :

M-7

ABS. JOUR. : RZBiol., No. 19, 1958, No. 87143

AUTHOR :
INST. :
TITLE :

ORIG. PUB. :

ABSTRACT : of maturity), and were kept in moistened condition for 3, 5, 10, 15, 20 and 30 days at a temperature of 50-70°. Raw cotton stored under normal conditions served as control. Thereafter, the fiber was separated and its quality was tested. It was found that on the third day of storage, under conditions of spontaneous heating, the fiber acquires a cream coloration, and on the 10-15th day a dirty yellowish-grey color. After 15 days of storage strength of the fibers decreases sharply, which is associated with a shortening of the fibers. Cells of the upper layers of seed-epidermis become less strongly bound together and as a result the amount of peel attached to fiber increases. Fineness of fiber is not affected by storage. -- D. B. Vakhmistrov.

CARD: 2/2

CA

A ventilated funnel. I. I. Topuz. *Zavodskaya Lab.* 19, 1107(1950).—For dispensing obnoxious liquids a funnel can be used which is provided with a jacket connected to a suction fan, etc., thus carrying the noxious vapors away from the operator. A diagram is provided. G. M. K.

1ST AND 2ND ORDERS

PROCESSES AND PROPERTIES INDEX

3RD AND 4TH ORDERS

CA

Attachment to funnel for transferring liquids containing noxious gases. I. I. Topuz. U.S.S.R. 68,199, Apr. 30, 1947. M. Hoseb

COMMON ELEMENTS

COMMON VARIABLES INDEX

MATERIALS INDEX

OPEN

ASM-SLA METALLURGICAL LITERATURE CLASSIFICATION

MATERIALS INDEX

3RD AND 4TH ORDERS

2ND LETTER

1ST AND 2ND LETTER

AUTHOR INDEX

TOPUZ, I.I., inzhener

A new type of suction funnel. Khim.prom.no. 7 :206-207 Jl'47. (MLRA 8:12)
(Chemical apparatus)

TOPUZ, I. I.

I. I. Topuz. Description of a ventilating funnel. P. 1407

SO: Industrial Laboratory (USSR) 16, No. 11 (Nov. 1950)

TOPUZ, I. I.

A ventilated funnel. I. I. Topuz. Zavodskaya Lab. 16, 1407(1950).

For dispensing obnoxious liquids a funnel can be used which is provided with a jacket connected to a suction fan, etc., thus carrying the noxious vapors away from the operator. A diagram is provided.

GMK

immediate source clipping

KHOROSHEV, I.I.; SHAPIRO, A.A.; FROLOV, S.F.; TOPUZ, V.A.

Redesign of electric holding furnaces for the annealing of malleable cast iron. Lit. proizv. no.5:12-14 My '62. (MIRA 16:3)
(Electric furnaces) (Annealing of metals)

BALCHEVA, N.; MAR[illegible], [illegible]; [illegible], N. Tsvet. [illegible] and its [illegible]
V.; TAL[illegible]A, M.; [illegible], S.; [illegible], E.; TODOROVA, N.

Study of the chemical composition of human milk in deficient and normal lactation during the 1st 4 months. Nauch. tirek. (Sofiia) 4 no.1:1-9 '65.

1. Nauchno-izsledovatelski institut po akusherstvo i ginekologiia (Direktor prof. Br. Papasov).

TOPUZOV, I.

"Material on the history of kashkaval, the yellow cheese in Bulgaria."

p. 365 (Izvestiia, Vol. 9, 1958, Sofia, Nulgaria).

Monthly Index of East European Accessions (EEAI) LC, Vol. 7, No. 12, Dec. 58.

TOPUZOV, Iv. P.; SARAFOV, Iv. B.; GUDEV, Khr.

"Contribution to the history of veterinary medicine in Bulgaria" by Iv. Kalupov, As. Kaloianov, St. Ivanov, D. Dimitrov and D. Spasov. Reviewed by Iv. P. Topuzov, Iv. B. Sarafov and Khr. Gudev. Spisanie BAN 6 no.2:131-135 '61.

TOPUZOV, V. S. Cand Med Sci -- (diss) "The course of the bone-forming ~~osteogenetic~~ process in young organisms under conditions of partial disturbance ~~breach~~ of connection between the focus of injury and the central nervous system (Experimental clinical study)." Odessa, 1959. 15 pp (Odessa State Med Inst im N. I. Pirogov), 200 copies (KL, 52-59, 127)

TOPUZOV, V.S.

Healing of fractures in young animals in case of impaired innervation. Ortop.travm.i protez. 20 no.4:92-93 Ap '59. (MIRA 13:4)

1. Iz khirurgicheskogo otdeleniya (zav. - B.S. Topuzov) Petrovskoy rayonnoy bol'nitsy (glavnyy vrach - A.A. Sapelkina) Stalinskoy oblasti.

(FRACTURES)

TOPUZOV, V.S.

The use of an alcohol-novocaine solution in the combined treatment of fractures in children. Ortop., travm. i protez. 20 no.12:24-27 D '59. (MIRA 13:5)

1. Iz khirurgicheskogo otdeleniya (zav. - V.S. Topuzov) Petrovskoy rayonnoy bol'nitsy (glavnyy vrach - A.A. Sapelkina) Stalinskoy oblasti.
(FRACTURES in inf. & child.)
(ANESTHESIA REGIONAL)

TOPUZOV, V.S.

Management of rib fractures. Nov. khir. arkh. no.5:112-113 S-O '60. (MIRA 14:12)

1. Khirurgicheskoye otdeleniye (zav. - V.S.Topuzov) Petrovskoy rayonnoy bol'nitsy. Adres avtora: Stalino, 38, Glavnaya bol'nitsa. (RIBS--FRACTURE)

TOPUZOV, V.S.

Spontaneous rupture of the urinary bladder. Urologiia no.5:70 '61. (MIRA 14:11)

1. Iz khirurgicheskogo otdeleniya (zav. V.S. Tonyzov) Petrovskoy rayonnoy bol'nitsy goroda Stalino.
(BLADDER--RUPTURE)

TOPUZOV, V.S. (Donetsk, 38, u. Rubinshteyna, d.10, kv.4)

Rare case of invagination. Vest.khir. no.1:143-144 '62. (MIRA 15:1)

1. Iz khirurgicheskogo otdeleniya (zav. - V.S. Topuzov) Petrovskoy rayonnoy bol'nitsy (gl. vrach - A.A. Sapelkina) g. Donetska.
(INTESTINES—INTUSSUSCEPTION)

STUKALO, Z.I.; TOPUZOV, V.S.

Analysis of postoperative mortality in radical operations on gastric cancer. Klin. khir. no.1:15-19 '65.

(MIRA 18:8)

1. Donetskiy oblastnoy otdel zdravookhraneniya (glavnyy khirurg - Z.I.Stukalo) i Donetskiy oblastnoy onkologicheskiy dispanser (zav. khirurgicheskim otdeleniyem - V.S.Topuzov).

ARNAUTOV, V.T.; BARANOV, V.M.; DONSKOY, S.A.; PASTUKHOV. A.I.; SMIRNOV, L.A.; TORSHILOV, Yu.V.; TRET'YAKOV, M.A.; UDOVENKO, V.G.; FREYDENZON, Ye.Z.; SHCHEKALEV, Yu.S.; Prinimali uchastiye: MAKAYEV, S.V.; KOMPANIYETS, G.M.; NAGOVITSYN, D.F.; NOVOLODSKIY, P.I.; VARSHAVSKIY, V.L.; KOROGODSKIY, V.G.; KLIBANOV, Ye.L.: MEDVEDEVSKIKH, Yu.; TALANTSEVA, T.I.; DUBROV, N.F.; DZEMYAN, S.K.; TOPYCHKANOV, B.I.; CHARUSHNIKOV, O.A.; KHARITONOV, Yu.A.

Developing and mastering the technology of converting vanadium cast iron in oxygen-blown converters with a 100 ton (Mg) capacity. Stal' 25 no.6:504-508 Je '65. (MIRA 18:6)

1. Nizhne-Tagil'skiy metallurgicheskiy kombinat (for Makayev, Kompaniyets, Nagovitsyn, Novolodskiy, Varshavskiy, Korogodskiy, Klibanov, Medvedevskikh, Talantseva). 2. Ural'skiy nauchno-issledovatel'skiy institut chernykh metallov (for Dubrov, Dzemyan, Topychkanov, Charushnikov, Kharitonov).

REVNIVTSEV, V.I.; DMITRIYEV, Yu.G.; TOPYCHKANOV, N.Ya.; PESKOV, V.V.; KHOROBRYKH, A.V.

Use of ultrasonic waves to dress quartz sand. Stek. i ker. 18 no.11:19-21 N '61. (MIRA 15:3)
(Sand) (Ultrasonic waves--Industrial applications)

SICHENKO, V.K.; IVANOV, B.V.; POLYAKOV, I.I.; REZNIKOV, A.A.; DORFMAN, G.A.; IZRAELIT, E.M.; NOTYCH, A.G.; TOPYGIN, L.A.; CHALYY, G.Ya.; STETSENKO, Ye.Ya.; UDOVICHENKO, L.V.; FILIPPOV, B.S., nauchn. red.; LERNER, R.Z., nauchn. red.; GOL'DIN, Ya.A., glav. red.; KULESHOV, M.M., red.; POLOTSK, S.M., red.

[By-product coke industry] Koksokhimicheskoe proizvodstvo. Moskva, Metallurgiia, 1965. 167 p. (MIRA 18:7)

1. TSentral'nyy nauchno-issledovatel'skiy institut informatsii i tekhniko-ekonomicheskikh issledovaniy chernoy metallurgii. 2. Direktor TSentral'nogo nauchno-issledovatel'skogo instituta informatsii i tekhniko-ekonomicheskikh issledovaniy chernoy metallurgii (for Kuleshov).

DIL', A.; CHARUGINA, N.; BORODIN, A.; SOLODOVNIK, P.; SKLYAR, I.; SOLOVKIN, N.; POTAPOV, G.; PONOMAREV, N.; ALEKHIN, I.; SOLOMENTSEV, K.; TOPYLIN, N.; SKOROVAROV, M.; KARABANOV, S.; BOGDANOV, N.; STRYUKOV, P.

Nikolai Vasil'evich Romenskii (on the occasion of the 40th anniversary of his scientific, pedagogic, and public activity). Muk.-elev. prom. 24 no.12:29-30 D '58. (MIRA 12:1)
(Romenskii, Nikolai Vasil'evich, 1894-)

MOISEYEV, S., inzh.po tekhnike bezopasnosti; KALINOVSKIY, P., mekhanik; SHALOMOV, B., yuriskonsul't; TALANOVA, N., inzh.po tekhnike bezopasnosti; BYCHKOVA, I., inzh.; VORONOV, A., elektrik; SOKOLENKO, N.; KUTUZOV, P.; TOPYRIK, P., pensioner; FEDYUKOV, G., inzh.po tekhnike bezopasnosti; CHECHETKIN, A.; KLIMENT'YEVA, Ye.

Those, who serve us. Okhr. truda i sots. strakh. 3 no.7:52-53 Jl '60. (MIRA 13:8)

1. Reydovaya brigada. 2. Moskhladokombinat imeni Mikoyana (for Moiseyev). 3. Upravleniye Mosgorplodoovoshch (for Kalinovskiy). 4. TSentral'nyy universal'nyy magazin Voyentorga (for Shalomov). 5. Gosudarstvennyy universal'nyy magazin, Moskva (for Talantova). 6. Obshchestvennyy inspektor okhrany truda Mostorgstroya (for Bychkova). 7. Obshchestvennyy inspektor okhrany truda Mosrybokombinata (for Voronov). 8. Pravovoy inspektor Moskovskogo gorodskogo soveta profsoyuzov (for Sokolenko). 9. Obshchestvennyy inspektor okhrany truda kholodil'nika No.1, Moskva (for Kutuzov). 10. Moskovskiy rybokombinat (for Fedyukov). 11. Korrespondent gazety "Sovetskaya torgovlya" (for Chechetkin). 12. Zaveduyushchaya otdelom profsoyuznoy zhizni gazety "Sovetskaya torgovlya" (for Kliment'yeva). 13. Spetsial'nyy korrespondent zhurnala "Okhrana truda i sotsial'noye strakhovaniye" (for Gromov).

(Warehouses--Safety measures)
(Retail trade--Safety measures)

S/194/62/000/001/052/076
D201/D305

AUTHORS: Kossakowski, Zdzisław, Tor, Bogdan, Zieńkiewicz, Ryszard and Derulski, Zygmunt

TITLE: Design and assessment of technical requirements and of the measuring methods for UHF FM transmitters and receivers, used in mobile land communication systems of the Polish People's Republic

PERIODICAL: Referativnyy zhurnal, Avtomatika i radioelektronika, 1960, 7, no. 2, 3-37) no. 1, 1962, abstract 1-7-145 i (Prace Inst. Łączn.,

TEXT: The assessment is given of technical requirements and of the methods of measurements as applied to the mobile equipment for land operation. It is suggested that these requirements and methods be included in the Radio Communication Specifications issued by the Department of Long Distance Communications in 1960. The technical requirements and the methods of measurements apply to the mobile equipment, operating at frequency ranges 33-35, 44-46, 150-156

Design and assessment ... S/194/62/000/001/052/066
D201/D305

Mc/s. The corresponding specifications for the equipment in the 305-315 Mc/s range are being worked out at the Department of Long Distance Communications. /Abstracter's note: Complete translation./

Card 2/2

TOR, K. Klinika Dzieciecej U. J. i ze Szpitala sw. Ludwika w Krakowie. Porazenie dzieciece (choroba Heine-Medina) a inne kliniczne postacie ostrych schorzen mozgowia i rdzenia, notowane w Krakowie w latach 1945-1947 Infantile paralysis and other clinical forms of acute encephalitis and encephalomyelitis registered in Cracow in 1945-1947 Przeglad Lekarski, Cracow 1949, 5/12 (380-384) Graphs 3

Mass outbreaks of infantile paralysis were accompanied by cases of encephalitis and encephalomyelitis during 1945-1947, with a July peak in morbidity. While poliomyelitis was on the decrease during the three-year period, the incidence of a seasonal incidence of each of the three forms was noted. Of the toal of 271 cases, 192 were diagnosed as poliomyelitis and 79 as encephalomyelitis and encephalitis. The two latter forms are considered as manifestations of poliomyelitis. This assumption is based on the coincidence of the outbreaks and the seasonal peak of the epidemics. The negative results of intracerebral inoculations of mice and rabbits with encephalitic material also support this theory. The author considers favourably the theory advocated by American investigators which regards the intestinal tract as the portal of entry of poliomyelitis virus.

Anigstein - Galveston (XX, 4,8)

SO: Medical Microbiology and Hygiene, Section IV, Vol 3, No. 1-6

TOR K. KLINIKA DZIECIECEJ U. J. i ze Szpitala sw. Ludwika w Krakowie. Porazenie dzieciece (choroba Heine-Medina) a inne kliniczne postacie ostrych schorzen mozgowia i rdzenia notowane w Krakowie w latach 1945-1947 Infantile paralysis and other clincal forms of acute encephalitis and encephalomyelitis registered in Cracow in 1945-1947. Przegl. Lek. 1949, 5/12 (380-384) Graphs 3

Mass outbreack of infantile paralysis were accompanied by cases of encephalitis and encephalomyelitis during 1945-1947, with a July peak in morbidity. While poliomyelitis was on the decrease during the three-year-period, the incidence of encephalitis and encephalomyelitis showed an upward general trend. However, a seasonal incidence of each of the three forms was noted. Of the total of 271 cases, 192 were diagnosed as poliomyelitis and 79 as encephalomyelitis and encephalitis. The two latter forms are considered as manifestations of poliomyelitis. This assumption is based ont he coincidence of the outbreaks and the seasonal peak of the epidemics. The negative results of intracerebral inoculations of mice and rabbits with encephalitic material also support this theory. The author considers favourably the theory advocated by American investigators which regards the intestinal tract as the portal of entry of poliomyelitis virus.

Anigstein - Galveston (XX,4,8)

So: Neurology & Psychiatry Section VIII, Vol. 4, No. 1-6

TORACHESHNIKOV, N.S.

Inorganic Chemistry

Bicentenary of Lomonosov's "Word on the use of chemistry." N. S. Torocheshnikov. *Uspekhi Khim.* 1, 103-5 (1952).—A summary and discussion of Lomonosov's statement (1751) on utility of chemistry. G. M. Kosolapoff

Chem

TORAMANYAN, A., arkhitektor

Farm for 480 cows with loose housing the year around.
Sel'. stroi. no.10:27-28 O '62. (MIRA 15:11)
(France—Dairy barns)

TORAN, Henrich, inz.

Optimum organization of worksites. Tech praca 17 no.2:106-110 F '65.

1. Kovoprojekta, Bratislava.

TORAYEV, O.

Cand Geol-Min Sci - (diss) "Geological structure and prospects for petroleum-gas content of the Chikishlyarskaya Depression." Moscow, 1961. 24 pp; (Moscow Order of Labor Red Banner Inst of Petrochemical and Gas Industry "MINKh and GP" imeni I. M. Gubkin); 150 copies; free; (KL, 6-61 sup, 204)

TORAYEV, O.

Basic characteristics of the tectonics and outlook for finding oil and gas in the Chikishlyar Lowland. Trudy Inst. geol. AN Turk. SSR 4:232-251 '62. (MIRA 16:7)
(Chikishlyar Lowland--Petroleum geology)
(Chikishlyar Lowland--Gas, Natural--Geology)

TORBA, I.

"Quick-drying bricks of high moisture content." p. 61. (MATERIALY BUDOWLANE, Vol. 8, no. 2, Feb. 1953, Warszawa, Poland)

SO: Monthly List of East European Accessions, L. C., Vol. 3, No. 5, May 1954, Uncl.

SHTEYNBERG, O.G., inzh.; TORBA, V.A., inzh.

Broaching block for machining external surfaces of bearing caps.
Vest.mash. 41 no.1:69-74 Ja '61. (MIRA 14:3)
(Broaching machines)

S/121/60/000/012/014/015
A004/A001

AUTHORS: Shteynberg, O. G., Torba, V. A.

TITLE: The Broaching of Outer Surfaces by Generating Broaches

PERIODICAL: Stanki i Instrument, 1960, No. 12, pp. 31-32

TEXT: The dizelestroitel'nyye zavod im. Kirova (Diesel Engine Plant im. Kirov) at B. Tokmak machines the nine surfaces of crankshaft bearing covers in one operation with the aid of a new tunnel-shaped generating broach. Formerly this required six operations. The authors call the employed method of progressive broaching the most effective of all mechanical machining operations. This method consists in the following: each tooth of the broach removes the full thickness of the allowance, cutting a strip of the surface being machined which is equal to the magnitude of feed per tooth. Since the teeth of such broaches cut the metal layer located under the casting skin, the wear of the broach teeth during

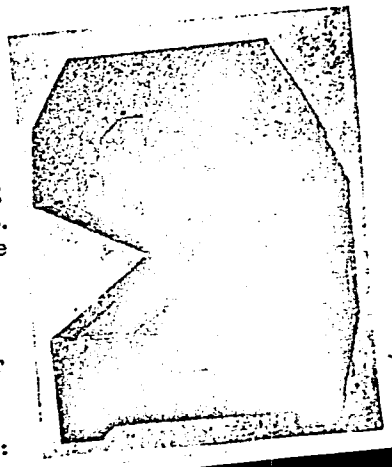

Figure 1:

Card 1/5

progressive broaching is considerably lower than with ordinary broaching methods. Moreover, all teeth are worn to the same degree. The broach was made of individual sections which were combined in the stationary part of the device. To facilitate the mounting and setting of the broaches, the stationary part of the broaching device was made detachable as it is shown in Figure 2. To insure the right position of the broaches fixed in the upper part of the device relative to those in the lower part both halves of the device are set with the aid of two keys placed in the joining plane of the device. Figure 3

Figure 3:

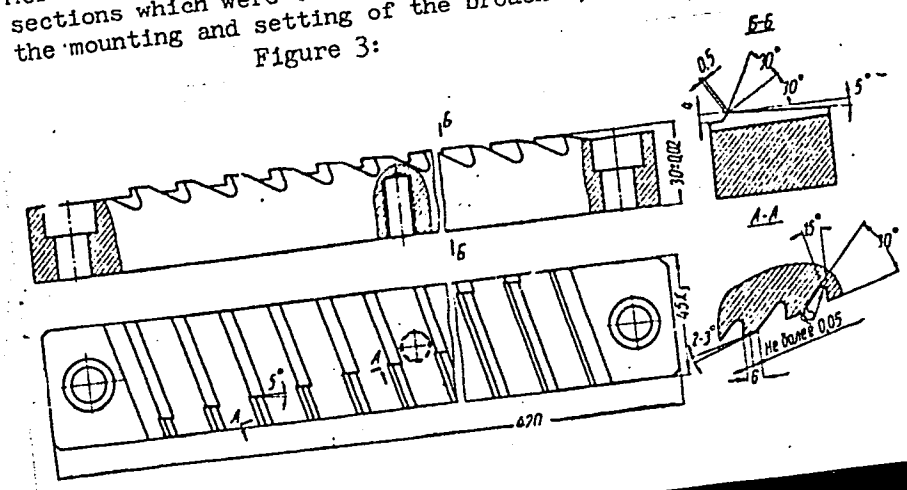

shows one of the flat progressive broaches, the teeth of which have a rake of 15° which produces the rake angle of cut for the lateral cutting edges. The lateral cutting edges are placed at an angle of 60° relative to the broach base and have a ground back edge. The rake of 15° ensures a uniform distribution of the cutting stresses which creates favorable infeed conditions and reduces vibrations. The direction of rake was selected in such a way that the broach under the effect of the lateral composite broaching stress is pressed towards the body of the device. The broach has five cutting teeth of 0.1 mm lead and four calibrating teeth.

Figure 4:

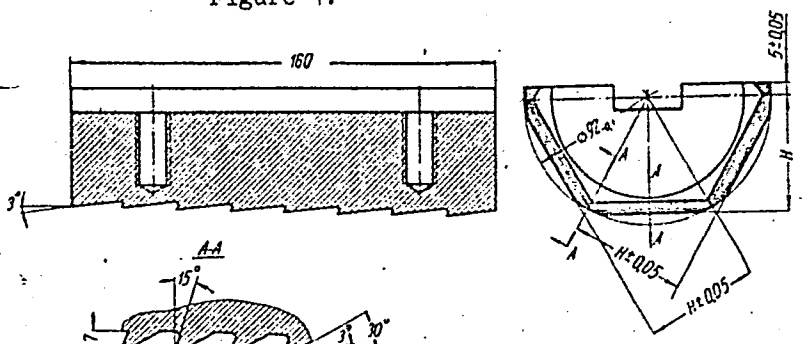

N° зуба	1	2	3	4	5	6	7	8
H	39	39,5	40	40,5	41	41,5	42	42,5

Fig. 4

The Broaching of Outer Surfaces by Generating Broaches

S/121/60/000/012/014/015
A004/A001

Figures 4 and 5 show the generating broaches for the machining of the curved surface of the component. The cutting scheme of the broaches has been selected in the following way: each tooth of the first and second broach has the profile of half a hexahedron, distance H from the center to the sides of which increases from tooth to tooth by 0.5 mm. The first broach removes thus four small sections of the cylindrical surface over the full depth of the allowance. The profile of the second broach relative to the profile of the first is shifted through 30°. In such a way the second broach cuts the sections located between the parts machined by the first broach. The broaches have a

Figure 5:

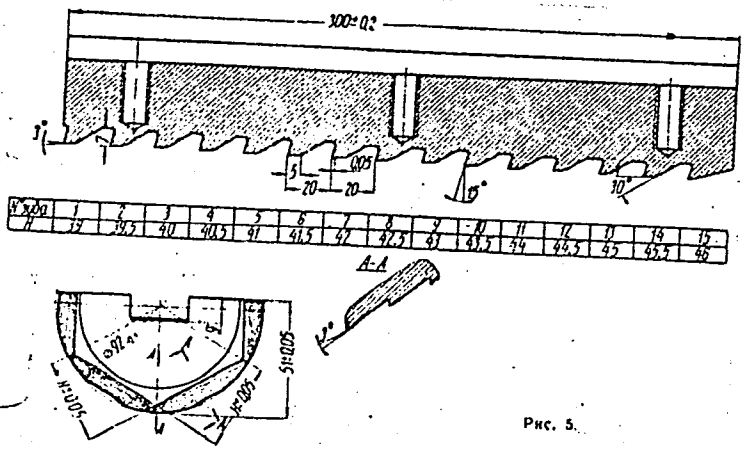

Рис. 5.

Card 4/5

long life. Since their introduction at the Plant more than 20,000 bearings of gray cast iron have been machined without re-grinding the broaches. Broaching is effected on a horizontal broaching machine with hydraulic drive. The maximum broaching stress amounts to 40 tons. The introduction of the new broaching process has reduced the labor consumption of machining the nine surfaces of the component by more than 4 times. There are 5 figures.

KOTEL'NIKOV, I.V.; F NOMAREV, P.U.; GRINBERG, Yu.I.; GALAYEV, I.P.; TORBA, V.G.; POPOV, N.N.; VARAVA, V.I.

Making ferromanganese with the use of manganese carbonate ores. Met. i gornorud. prom. no.3:6-9 My-Je '64.

(MIRA 17:10)

TORBA, V.I., inzh.

The MMD-100 milking unit. Mekh. sil'. hosp. 13 no.4:19-20 Ap '62. (MIRA 17:3)

TORBA, V.I., inzh.

The AMK-2 unit for the preparation of mixed feed.
Mashinostroenie no.1:83-84 Ja-F '62. (MIRA 15:2)

1. Ukrainskaya mashinoispytatel'naya stantsiya.
(Feed mills)

POL/35-60-5-4/23

11(1),18(7),

AUTHOR: Torba, Stanisław, Master of Engineering

TITLE: Measurement of Quick Changing Temperatures Applied During Investigations of Unsteady Heat Exchange Processes

PERIODICAL: Przegląd Mechaniczny, 1960, Nr 5, p 124 - 130

ABSTRACT: For a complete evaluation of mechanical installations in which heat energy is being used, the accurate knowledge of the heat exchange process between hot flue-gases and the walls is of great importance. It allows to estimate the loss of hot gas energy for heating metal walls and for analysis of working conditions of walls in contact with hot flue-gases. The first problem, the heat exchange process is already well known, but the second, i.e. walls working conditions needs more scientific investigations in order to establish certain metal properties affected by high temperatures. If the process of

Card 1/3

POL/35-60-5-4/23

Measurement of Quick Changing Temperatures Applied During Investigations of Unsteady Heat Exchange Processes

heat exchange is not steady or the walls are of a complicated shape, investigations are very difficult, sometimes even impossible. In such a case experimental investigations might be very helpful. This article deals just with a method which allows to investigate variable heat exchange between gases of high temperature, pressure and velocity either of short duration or repeating at intervalls. The main element of investigation is an accurate measurement of metal temperature close to a spot where it contacts hot gases. This is done by a specially constructed thermo-electric feeler, fitted deep into the wall in such a way, that hot junction of thermocouple just about touches the hot side of the wall. Temperatures picked up by this feeler are registered either by a standard recorder or in case of very

Card 2/3